CONTROL TECHNIQUES

DIGITAX SF

EASY TO USE, LOW POWER SERVO SOLUTIONS

DRIVE OBSESSED

SERVO SOLUTIONS FOR CONTINUOUS & PULSE DUTY APPLICATIONS

Receive the ultimate in performance and flexibility for machinery manufacturers with a broad range of servo drives and motors.

Digitax SF

The Digitax SF servo drive and motor package works perfectly with the Control Techniques servo portfolio providing a compact, cost effective and easy to use solution for all kinds of application requirements.

Digitax SF offers:

- High performance drives with pulse train or analog interface and serial communications
- This range of light-duty industrial motors offers several inertia levels to meet different application requirements

Unidrive M700

Providing optimum performance and an extensive power range - M700 is the ideal option for continuous duty applications that need precise continuous torque delivery.

Digitax HD

Bring superior performance to high dynamic, pulse duty applications, where high peak torque is essential for fast acceleration with the Digitax HD range.

Unimotor

Unimotor is a comprehensive family of high performance AC brushless servo motors. With a wide torque and speed range and a broad selection of feedback options, Unimotor offers the perfect match for Digitax HD and Unidrive M700 to meet any application requirement.

Digitax SF

0.05 kW - 2 kW

200 V

Digitax HD

0.25 kW - 7.5 kW

200 V | 400 V

Unidrive M700

1.75 kW - 2.8 MW

200 V | 400 V | 575 V | 690 V

300% Overload	200% Overload
Digitax SF Motor (Available in low, middle and high inertia)	Pulse Duty Servo Range - Unimotor HD (Optimized with the Control Techniques pulse duty drive) Continuous Duty Servo Range - Unimotor FM (Optimized with the Control Techniques continuous duty drive) Induction (Optimized with the Leroy-Somer IMfinity® range) High efficiency motors

DIGITAX SF

The perfect choice for low powered precision servo solutions with its dedicated servo range from 50W to 2 kW.

With 17-bit resolution, robust magnetic encoder technology and pulse train or analogue control interface, **Digitax SF offers a cost effective servo solution, without compromising on performance.**

Magnetic encoder technology

- Robust in harsh environments
- Ultra-low energy consumption for reduced maintenance
- Standardised flange sizes
- IP 65 or 67 motors

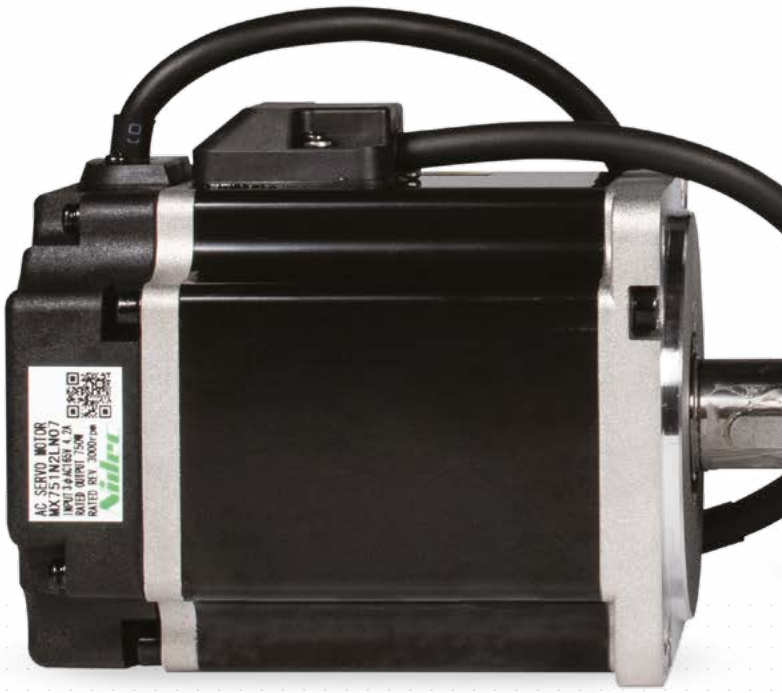

Versatile analogue or pulse train interface

Offering easy integration with any PLC or motion controller

Built-in keypad

With 6 digit 7-segment status display for easy startup, parameter setting, and tuning

Operating standalone

Using the on-board 16-point positioning table

PC-USB interface

For parameter settings, tuning, and status display in the dedicated software Digitax SF Connect

Multiple motor inertia levels available

Covering a wide range of applications, from semiconductor manufacturing to textile, packaging machines, robotics, extruders, metering and other applications requiring speed, precision and accuracy.

DIGITAX SF
CONNECT

Digitax SF Connect is a simple to use PC tool with a familiar Windows interface and intuitive graphical tools for simple parameter setting, tuning and diagnostics.

A positioning table and test run features mean machine start-up is also a breeze.

Straightforward to setup and tune, Digitax SF offers high servo performance at the click of a button. For demanding applications, a rich selection of filters to dampen mechanical resonances and suppress tip vibration can be easily configured within Digitax SF Connect with the aid of FFT frequency analysis.

FREE DOWNLOAD

Drive set-up

Quickly find everything you need for quick and easy installation of your drives.
Visit: www.drive-setup.com

FREE DOWNLOAD

Diagnostic Tool

Quickly solve any error codes that the drive may show. You can download our Diagnostics Tool app at:
controltechniques.com/mobile-applications

Get it from Microsoft | Download on the App Store | GET IT ON Google Play

*For Microsoft users, please note that this mobile app operates with Windows 10 only.

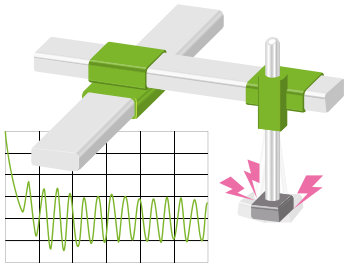

● No damping filter used

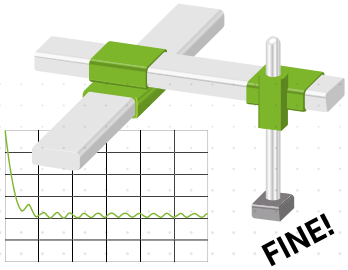

● Damping filter used

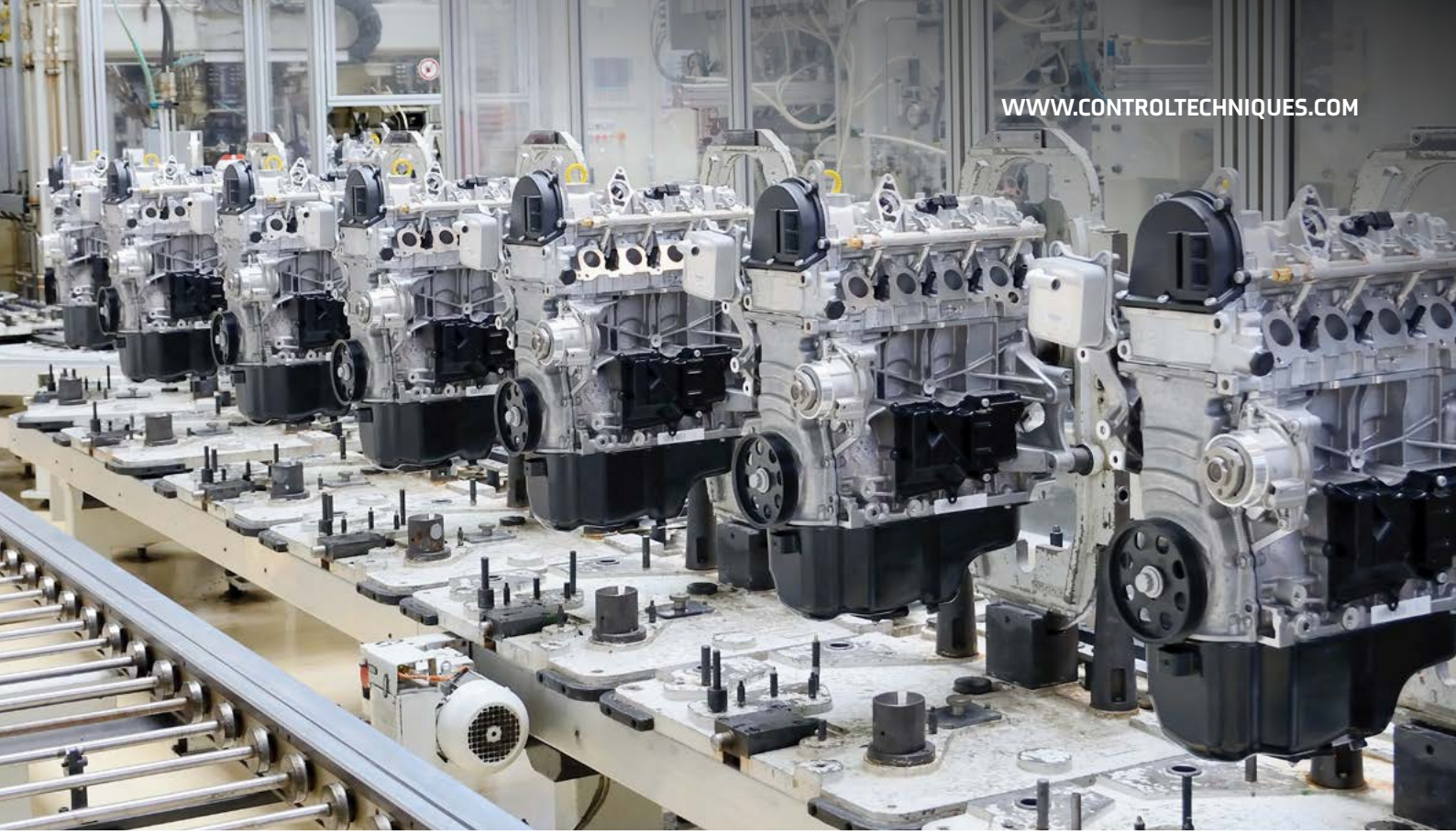

Digitax SF Connect
Digitax SF Connect

MOTOR & DRIVE COMBINATIONS

		Motor Inertia Level	
		Low Inertia	Middle Inertia
Motor Flange Sizes	40mm		 50 W | 100 W | 3000 rpm rated 6000 rpm maximum | IP65
	60mm	 200 W | 400 W | 3000 rpm rated 6000 rpm maximum | IP65	
	80mm	 750 W | 3000 rpm rated 6000 rpm maximum | IP65	
	130mm		 1 kW | 1.5 kW | 2 kW | 3000 rpm rated 3000 rpm maximum | IP65

High Inertia	Drive Compatibility
	 50 W | 100 W
 200 W | 400 W | 3000 rpm rated 6000 rpm maximum | IP65	 200 W | 400 W
 750 W | 3000 rpm rated 6000 rpm maximum | IP65	 750 W
 1 kW | 1.5 kW | 2000 rpm rated 3000 rpm maximum | IP67	 1 kW 1.5kW | 2 kW

PART NUMBER
DRIVES

DA	2	Y	Z

Series

Input Power Supply		
Code	Main Circuit Power	Control Power
2	AC 200 V - 240 V (*)	DC 24 V

(*) Single- or Three-phase option depends on compatible motor.

50 W - 750 W : Single-phase
1 kW : Single-phase/Three-phase
1.5 kW, 2 kW : Three-phase

Compatible Motor		
Code	Model	Rated Output
Y	Mx500x2xx	50 W
Z	Mx101x2xx	100 W
1	Mx201x2xx	200 W
2	Mx401x2xx	400 W
3	Mx751x2xx	750 W
4	Mx102x2xx	1 kW
6	Mx152x2xx	1.5 kW
8	Mx202x2xx	2 kW

Main Circuit Power Supply	
Code	Supply
Z	50 W
1	100 W
2	200 W
4	400 W
8	750 W
A	1 kW
B	1.5 kW
C	2 kW

PART NUMBER
MOTORS

MY	101	N	2	L	N

Series

Code	Power	Specification
MX	200 W | 400 W | 750 W	Low Inertia
MY	50 W | 100 W	Middle Inertia
MM	1 kW | 1.5 kW | 2 kW	Middle Inertia
MZ	200 W | 400 W | 750 W	High Inertia
MH	1 kW | 1.5 kW	High Inertia

Voltage

Code	Specification
2	AC 200 V to 240 V

Encoder

Code	Specification
N	17 bit single turn (incremental)
A	17 bit multi-turn with battery (Absolute)

Rated Output

Code	Rated Output
500	50 W
101	100 W
201	200 W
401	400 W
751	750 W
102	1 kW
152	1.5 kW
202	2 kW

Brake

Code	Holding Brake
N	Without
A	With

Shaft End Specification/Oil Seal

Code	Shaft End	Oil Seal
S (P)	Straight	Without
K (H)	Key	Without
T (R)	Straight	With
L (J)	Key	With

() Exclusively for 200 W. Shaft diameter = Ø11

The straight shaft products are not tapped end.

PART NUMBER
MOTOR CABLES

M	A	C	01	A	05
Cable Type	**Jacket Type**	**Cable Line**	**Power Segment**	**Cable Standard**	**Cable Length (m)**
M = Power cable	A = Dynamic cable	A = Power or brake cable	01 = 750 W and below		01 = 1
S = Encoder cable	B = Fixed cable	C = Encoder - single turn (incremental)	02 = 1 kW and above		03 = 3
B = Brake cable		S = Encoder - multi-turn with battery (absolute)			05 = 5
					10 = 10
					15 = 15
					20 = 20

Accessories

Order code	Phases	Accessory	Description
2216-0211	All	Input / Output (I/O) terminal block and cable assembly	Digitax SF drives are equipped with a 50 pin high-density I/O port. For ease of wiring, a pre-assembled cable and DIN rail mountable terminal block with screw-terminals is available to easily connect the drive I/O.
3412-0050	All	Input / Output: Interface Connector	50 pin high-density male plug for control signals, digital I/O and 24V auxiliary power
2490-2754	1	Surge absorber/protector	Quick response protection against power supply surges from mains supply to the Digitax SF drive.
2490-0004	3		
4200-0056	1	EMC Filter	EMC filters prevent emission of electromagnetic interference onto the AC supply lines. To ensure compliance with EMC, use the recommended EMC noise filter Rated Voltage (V): 250 Vac | Rated Current (A): Single phase: 5 A | Three Phase: 10 A
4200-3106	3		

Drive Basic Specifications

Item		Specification							
Drive model		**DA2YZ**	**DA2Z1**	**DA212**	**DA224**	**DA238**	**DA24A**	**DA26B**	**DA28C**
Applicable motor		M 500	M 101	M 201	M 401	M 751	M 102	M 152	MM202
Dimensions		(Refer to dimension chart on pages 18-19)							
Drive weight (kg)		0.7				0.8	1.0	1.6	
Input power	Main circuit power	Single-phase AC 200 V – 240 V ±10 % 50/60 Hz					Three-phase AC 200 V – 240 V ±10 % 50/60 Hz		
	Control power supply	DC 24 V ±10 %							
	Input current	0.8	1.3	2.4	3.6	7.2	Single-phase: 9.7 Three-phase: 5.1	6.1	9.0
	Control power Current consumption (mA Typ.)	170			210	260	350		
		(Inrush current is approx. 1.4 A)							
Control type		Three-phase PWM inverter sine-wave driven							
Output specification	Rated current (A)	0.7	1.0	1.7	2.7	4.3	5.6	9.9	12.2
	Output frequency (Hz)	0 – 500					0 – 250		
Encoder feedback		17 bit single turn (incremental) (The product can function as a multi-turn absolute type when batteries are added.)							
Control signal	Input	8-point (24 VDC system, opto-coupler input insulation) inputs whose functions are switched by the control mode							
	Output	8-point (24 VDC system, open-collector output insulation) outputs whose functions are switched by the control mode							
Analog signal	Input	Single ended (±10 V) input whose functions can be switched by the control mode							
Pulse signal	Input	RS-422 differential Open-collector							
	Output	Encoder feedback pulse (A-/B-/Z-phase), RS-422 differential output Z-phase pulse through open-collector							
Communication function		USB: connection to PC with Digitax SF Connect installed RS-485: host remote control communication (multi-drop compatible)							
Drive status display function		Drive status display function 6 digits of seven-segment display on Setup Panel Normal/Error display on STATUS LED Green light when Power ON Normal, Red light when Power ON Error, Dim when Power OFF							
Regeneration function		A braking resistor may be installed externally							
Control modes		Position control, velocity control, torque control							

Drive Environment Specifications

Item		Specification
Ambient temperature	For use	0 – 50 °C
	For storage	-20 – 65 °C
Ambient humidity	For use For storage	20 – 85 % RH or less (without condensation)
Atmosphere for operation and storage		Indoor (no direct sunlight), free from corrosive gas, flammable gas, oil mist, dust, combustibles, abrasives
Altitude		≤ 1000 m
Vibration		≤ 5.8 m/s^2 (0.6 G) 10 to 60 Hz (no continuous operation allowed at resonant frequency)
Dielectric strength		AC 1,500 V for one minute across the primary and Ground/Earth FG
Electric shock protection		Class I (mandatory grounding)
Overvoltage category		II
Installation environment		Pollution degree 2

Drive Function Specifications

Item			Specification
Position control mode	Pulse input command	Control input	Servo ON, alarm reset, command input inhibit, emergency stop, position error counter clear, 2-stage torque limit inhibit, ABS data demand, homing start
		Control output	Alarm status, servo status, servo ready, under torque limit, brake release, positioning complete, motion complete, alarm, emergency stop brake release, ABS data transmitting, homing complete
		Maximum command pulse frequency	RS-422 differential: 4 Mpps Open-collector: 200 kpps
		Input pulse signal form	Pulse + direction, A-/B-phase quadrature encoder pulse, CW + CCW pulse
		Command pulse-paired frequency	Ratio A/B 1/1,000 < A/B < 1,000 Setting range A: 1 – 65,535 B: 1 – 65,535
	Internal position command	Control input	Servo ON, alarm reset, position error counter clear, motion start point selection 16, home position sensor input, homing
		Control output	Alarm status, servo status, servo ready, under torque limit, brake release, homing completion, motion complete
		Operation mode	Point table, communication operation
	Smoothing filter		FIR filter
	Damping control		Enabled

Velocity control mode	Analog command	Control input	Servo ON, alarm reset, command input inhibit (zero torque command), 2-stage torque limit, CCW/CW run inhibit
		Control output	Alarm status, servo status, servo ready, under torque limit, brake release
		Speed command input	Input voltage -10V to +10V (maximum speed is reached at ±10 V)
	Internal speed command	Control input	Servo ON, alarm reset, start 1 (CCW), start 2 (CW), 8-speed setting, 2-stage torque limit
		Control output	Alarm status, servo status, servo ready, under torque limit, brake release
	Smoothing filter		IIR filter, FIR filter
Torque control mode	Analog command	Control input	Servo ON, alarm reset, command input inhibit (zero torque command), 2-stage torque limit, CCW/CW run inhibit
		Control output	Alarm status, servo status, servo ready, under torque limit, brake release
		Torque command input	Input voltage -10 V to +10 V (maximum torque is reached at ±10 V)
	Smoothing filter		IIR filter
Common features	Speed observer		Available
	Auto-tuning		Available
	Encoder output division/multiplication		Available
	Tuning / function setup		Available through the Digitax SF setup software "Digitax SF Connect" Tuning with the setup panel on the drive front side
	Protective functions	By hardware	Overvoltage, low voltage, overcurrent, abnormal temperature, overload, encoder error
		By software	Overspeed, position error too high, parameter errors
	Alarm log		Can be viewed with the setup software Digitax SF Connect

Safety Standards

Specification		Motor	Drive
EU/EC Directive	Low Voltage Directive (*1)	EN60034-1 EN60034-5	EN61800-5-1
	EMC Directive (*2)	EN61000-6-2 EN55011 Class A, Group 1	EN61000-6-2 EN55011 Class A, Group 1
	Machinery Directive	Not Applicable	
UL Standards (*1)		1004-1 1004-6	508C
South Korea Radio Law (KC)		Not applicable	KN11 KN61000-6-2
China Compulsory Product Certification System (CCC)		Not Applicable	

(*1) Install the product in the environment that meets the following requirements: Overvoltage Category II | Class I | Pollution Degree 2 (Circuitry)

(*2) Refer to the Digitax SF Instruction Manual for further guidance

Not Applicable

Motor General Specifications

Item	Specification
Ambient temperature for operation	0 – 40 °C
Ambient humidity for operation	20 – 85 % RH (no condensation)
Ambient temperature for storage	-20 – 65 °C (no condensation) Maximum temperature 80 °C, 72 hours
Ambient humidity for storage	20 – 85 % RH (no condensation)
Atmosphere for operation/storage	Indoor (no direct sunlight), free from corrosive gas, flammable gas, oil mist, dust, combustibles, abrasives
Insulation resistance	≥ 5 M Ω at 1,000 VDC
Dielectric strength	AC 1500 V for one minute across the primary and Ground/Earth FG
Operating altitude	≤ 1000 m
Vibration class	V15 (JEC 2121)
Vibration resistance	49 m/s² (5 G)
Impact resistance	98 m/s² (10 G)
Protective structure	IP65: 50 W – 750 W IP67: 1 kW – 2 kW
Electric shock protection	Class I (mandatory grounding)
Overvoltage category	II
Installation environment	Pollution degree 2

Encoder Basic Specifications

Item			Specification	
Motor model			M 2 N	M 2 A
Resolution			Incremental 17 bit	Absolute 17 bit
Environmental requirements	Ambient operating temperature		0 – 85 °C	
	External disturbance magnetic field		±2 mT (20 G) or below	
Electrical specifications	Power supply	Voltage	DC 4.5 – 5.5 V (power supply ripple ≤ 5 %)	
		Current consumption	160 mA typ. (not including inrush current)	
	External battery	Voltage	—	DC 2.4 – 4.2 V
		Current consumption	—	10 μA typ. (*1)
	Multi-turn count		—	65,536 counts
	Maximum revolving speed		6,000 rpm	
	Count-up direction		CCW (*2)	
	Output/input type		Differential	
Communication specifications	Transmission method		Half-duplex asynchronous serial communication	
	Communication speed		2.5 Mbps	

(*1) Measurement conditions: room temperature, motor not in motion, battery voltage of 3.6 V.

(*2) CCW when viewed from the load side shaft end.

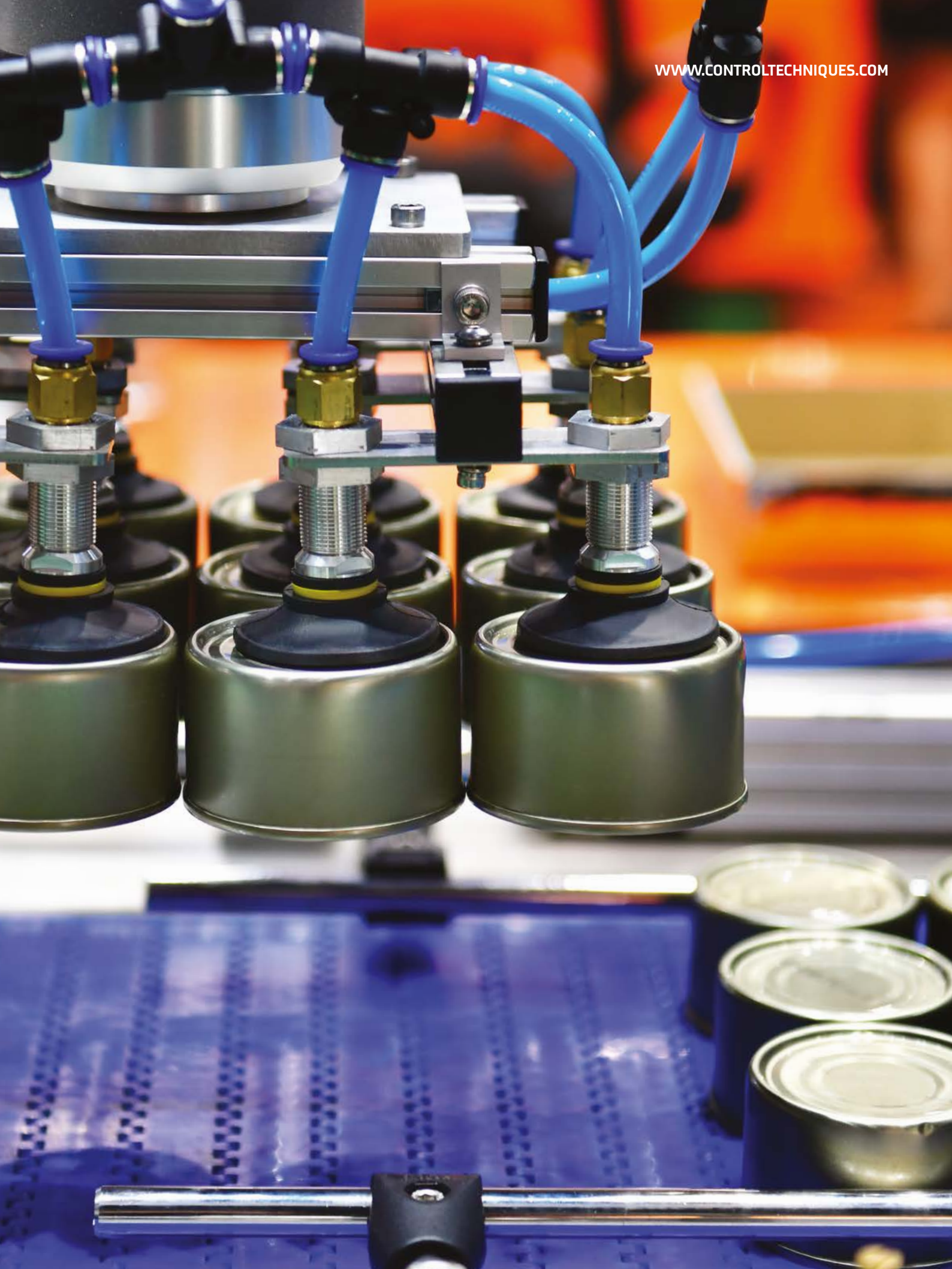
WWW.CONTROLTECHNIQUES.COM

Dimensions

50 W to 400 W (DA2YZ | DA2Z1 | DA212 | DA224)

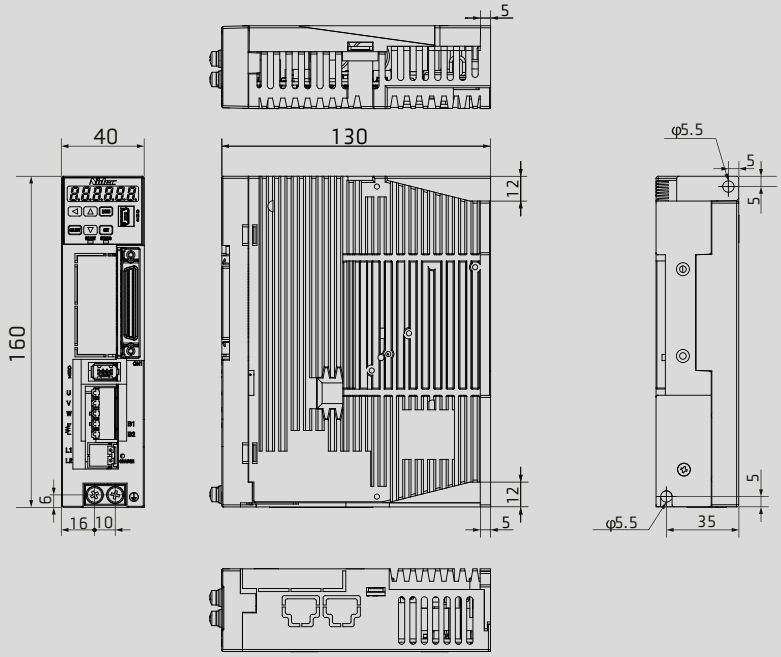

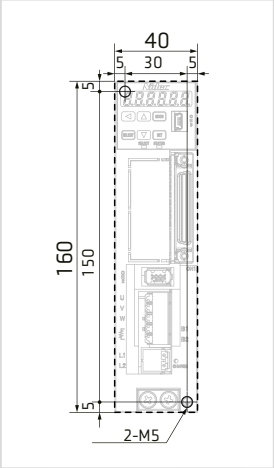

Mounting Dimensions

(mm)

750 W (DA238)

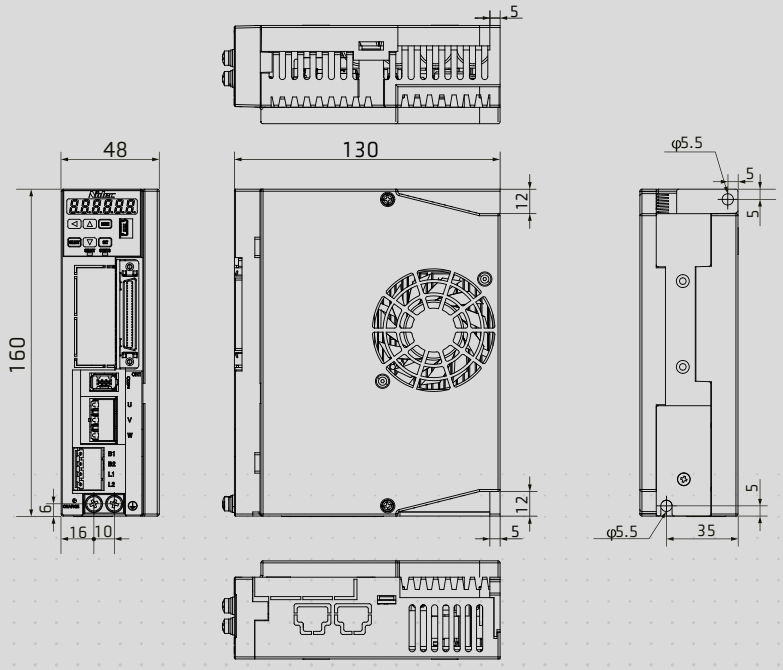

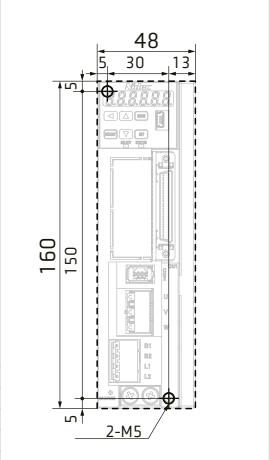

Mounting Dimensions

(mm)

1 kW (DA24A)

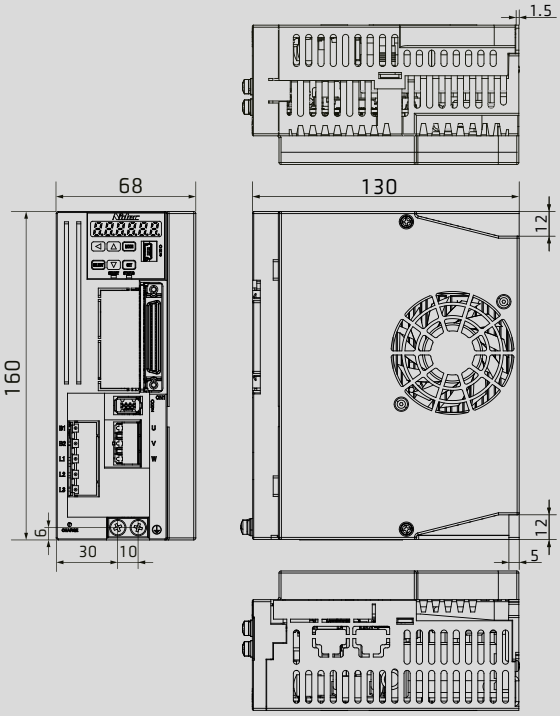

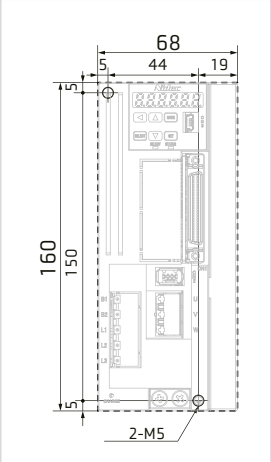

Mounting Dimensions

(mm)

1.5 kW, 2 kW (DA26B | DA28C)

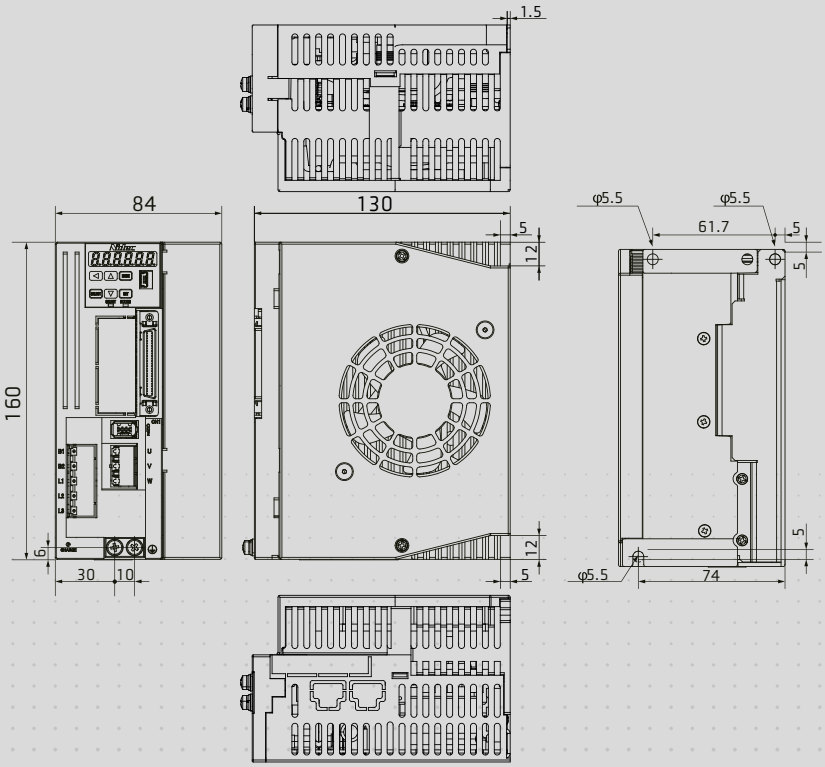

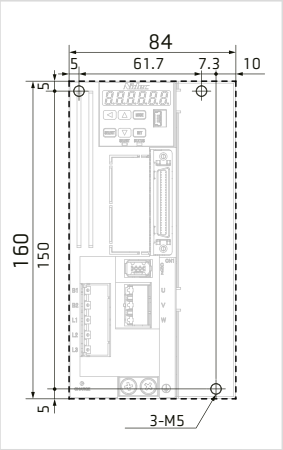

Mounting Dimensions

(mm)

040 Frame Specification

The straight shaft products are not tapped end.

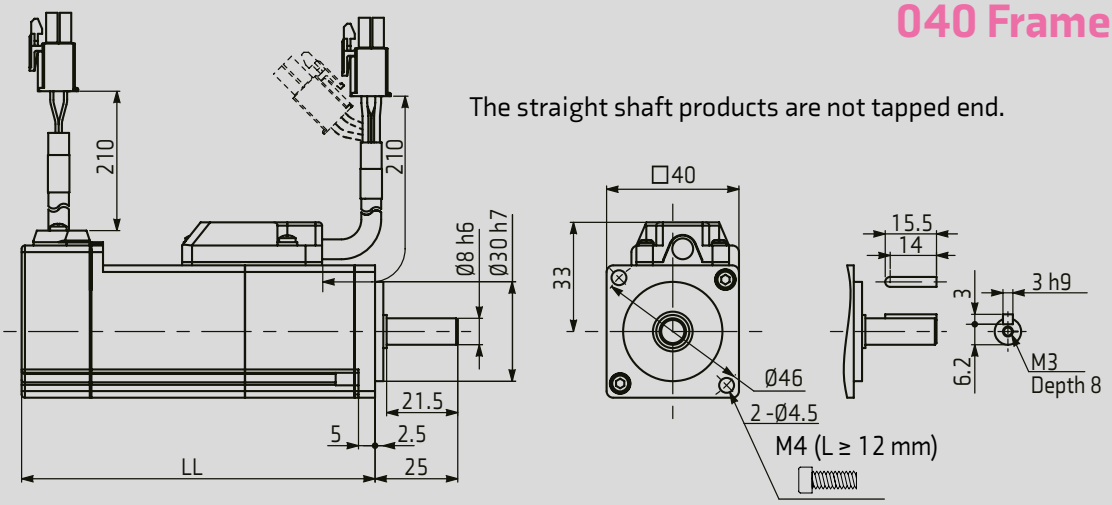

Motor Specifications

	Unit	MY500 2	MY101 2
Voltage	V	AC200V–240V	AC200V–240V
Rated output power	kW	0.05	0.1
Rated torque	Nm	0.16	0.32
Instantaneous max. torque	Nm	0.56	1.12
Rotor inertia (without brake)	kg·cm²	0.039	0.061
Rotor inertia (with brake)	kg·cm²	0.047	0.069
Mechanical time constant (without brake)	ms	1.92	1.17
Mechanical time constant (with brake)	ms	2.31	1.32
Electrical time constant	ms	0.74	0.89
Rated speed	rpm	3000	3000
Maximum revolving speed	rpm	6000	6000
Torque constant	Nm/A	0.25	0.35
Induced voltage constant per phase	mV/(rpm)	8.8	12.3
Mass (without brake)	kg	0.4	0.5
Mass (with brake)	kg	0.6	0.8
Permissible radial load	N	68	68
Permissible axial load	N	58	58

Brake Specification

		MY500 2	MY101 2
Rated voltage	V	DC24V ±10 %	DC24V ±10 %
Rated current	A	0.25	0.25
Static friction torque	Nm	>0.16	>0.32
Engage time	ms	<35	<35
Release time	ms	<20	<20
Release voltage	V	> DC1V	> DC1V

Motor Size LL (mm)

Brake	Without		With	
Oil seal	Without	With	Without	With
MY500 2	66.4	72.0	106.8	112.4
MY101 2	82.4	88.0	122.8	128.4

060 Frame Specification

The straight shaft products are not tapped end.

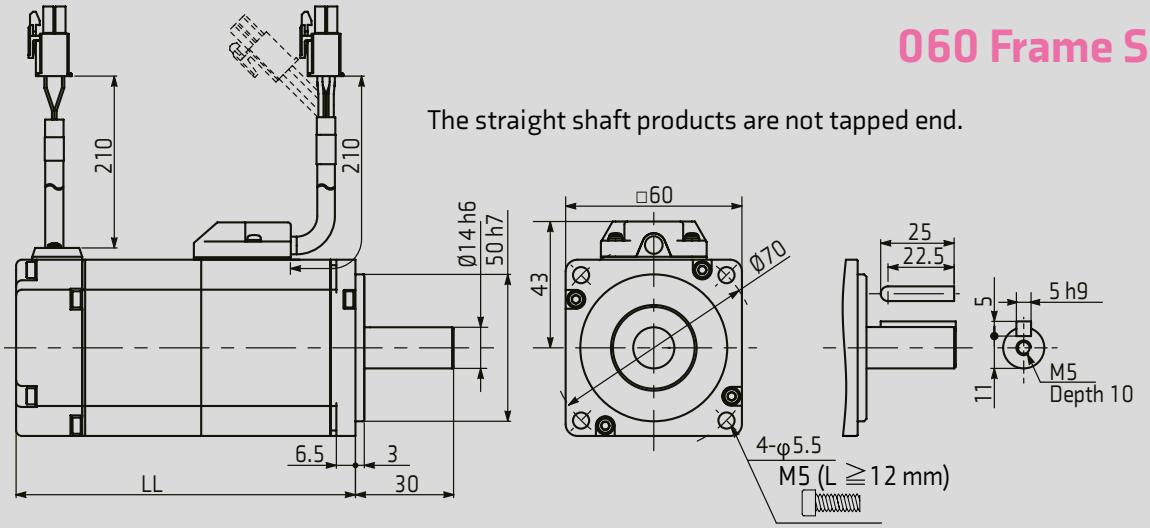

Motor Specifications

	Unit	MX201 2	MZ201 2	MX401 2	MZ401 2
Voltage	V	AC200V–240V	AC200V–240V	AC200V–240V	AC200V–240V
Rated output power	kW	0.2	0.2	0.4	0.4
Rated torque	Nm	0.64	0.64	1.27	1.27
Instantaneous max. torque	Nm	1.91	1.91	3.82	3.82
Rotor inertia (without brake)	kg·cm²	0.14	0.44	0.23	0.71
Rotor inertia (with brake)	kg·cm²	0.17	0.47	0.26	0.73
Mechanical time constant (without brake)	ms	0.72	2.23	0.47	1.42
Mechanical time constant (with brake)	ms	0.87	2.38	0.53	1.47
Electrical time constant	ms	2.53	2.53	2.92	2.92
Rated speed	rpm	3000	3000	3000	3000
Maximum revolving speed	rpm	6000	6000	6000	6000
Torque constant	Nm/A	0.41	0.41	0.49	0.49
Induced voltage constant per phase	mV/(rpm)	14.3	14.3	17.1	17.1
Mass (without brake)	kg	0.8	1.0	1.3	1.5
Mass (with brake)	kg	1.3	1.5	1.8	2.0
Permissible radial load	N	245	245	245	245
Permissible axial load	N	98	98	98	98

Brake Specification

Rated voltage	V	DC24V ±10 %
Rated current	A	0.3
Static friction torque	Nm	>1.27
Engage time	ms	<50
Release time	ms	<15
Release voltage	V	> DC1V

Motor Size LL (mm)

Brake	Without	With
MX201 2	76.5	113.0
MZ201 2	93.5	130.0
MX401 2	93.5	130.0
MZ401 2	110.5	147.0

080 Frame Specification

The straight shaft products are not tapped end.

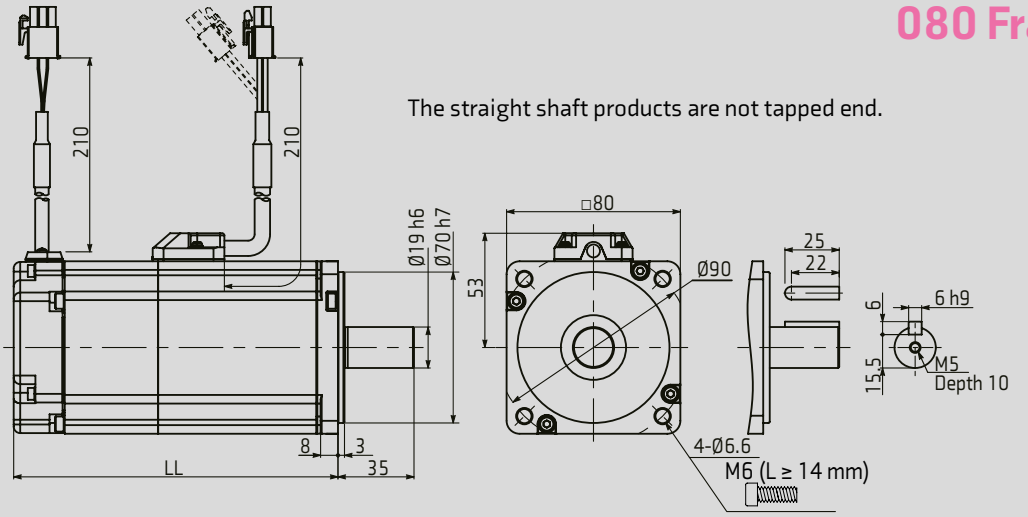

Motor Specifications

	Unit	MX751 2	MZ751 2
Voltage	V	AC200V–240V	AC200V–240V
Rated output power	kW	0.75	0.75
Rated torque	Nm	2.39	2.39
Instantaneous max. torque	Nm	7.1	7.1
Rotor inertia (without brake)	kg·cm²	0.74	1.61
Rotor inertia (with brake)	kg·cm²	0.94	1.81
Mechanical time constant (without brake)	ms	0.40	0.86
Mechanical time constant (with brake)	ms	0.50	0.96
Electrical time constant	ms	4.60	4.60
Rated speed	rpm	3000	3000
Maximum revolving speed	rpm	6000	6000
Torque constant	Nm/A	0.63	0.63
Induced voltage constant per phase	mV/(rpm)	21.9	21.9
Mass (without brake)	kg	2.2	2.5
Mass (with brake)	kg	3.0	3.3
Permissible radial load	N	392	392
Permissible axial load	N	147	147

Brake Specification

		MY500 2	MY101 2
Rated voltage	V	DC24V ±10 %	DC24V ±10 %
Rated current	A	0.25	0.25
Static friction torque	Nm	>0.16	>0.32
Engage time	ms	<35	<35
Release time	ms	<20	<20
Release voltage	V	> DC1V	> DC1V

Motor Size LL (mm)

Brake	Without	With
MX751 2	107.3	144.3
MZ751 2	122.3	159.3

The straight shaft products are not tapped end.

130 Frame Specification

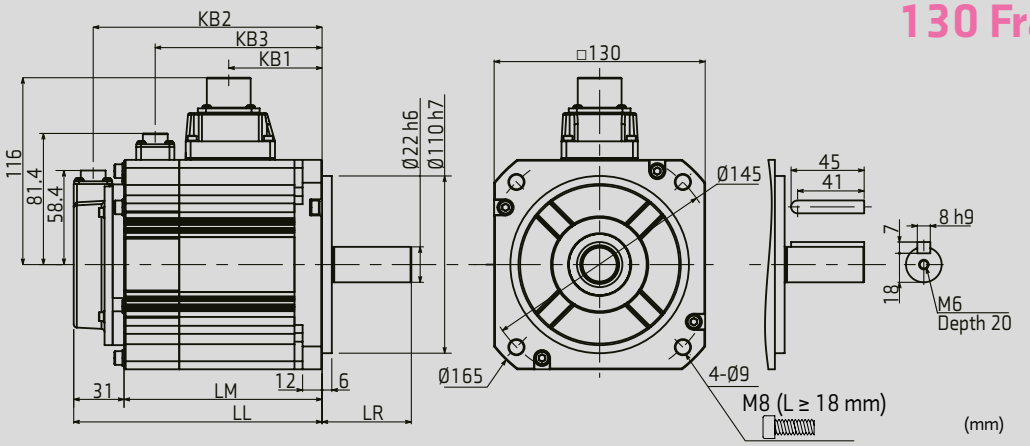

Motor Specifications

	Unit	MM102 2	MH102 2	MM152 2	MH152 2	MM202 2
Voltage	V	AC200V–240V	AC200V–240V	AC200V–240V	AC200V–240V	AC200V–240V
Rated output power	kW	1.0	1.0	1.5	1.5	2.0
Rated torque	Nm	4.77	4.77	7.16	7.16	9.55
Instantaneous max. torque	Nm	14.3	14.3	21.5	21.5	28.6
Rotor inertia (without brake)	kg·cm²	4.56	24.9	6.67	37.12	8.70
Rotor inertia (with brake)	kg·cm²	6.24	26.4	8.35	38.65	10.38
Mechanical time constant (without brake)	ms	0.76	4.17	0.60	3.32	0.58
Mechanical time constant (with brake)	ms	1.05	4.43	0.75	3.46	0.69
Electrical time constant	ms	10.1	10.1	12.2	12.2	12.2
Rated speed	rpm	2000	2000	2000	2000	2000
Maximum revolving speed	rpm	3000	3000	3000	3000	3000
Torque constant	Nm/A	0.88	0.88	0.81	0.81	0.85
Induced voltage constant per phase	mV/(rpm)	30.9	30.9	28.4	28.4	29.6
Mass (without brake)	kg	5.6	7.6	7.0	9.0	8.4
Mass (with brake)	kg	7.0	9.0	8.4	10.4	9.8
Permissible radial load	N	490	490	490	490	490
Permissible axial load	N	196	196	196	196	196

Motor Size (mm)

	Brake	LL	LM	LR	KB1	KB2	KB3
MM102 2	Without	128.0	97.0	55.0	57.5	116.0	-
	With	153.0	122.0	55.0	57.5	141.0	102.8
MH102 2	Without	163.0	132.0	70.0	92.5	151.0	-
	With	188.0	157.0	70.0	92.5	176.0	137.8
MM152 2	Without	145.5	114.5	55.0	75.0	133.5	-
	With	170.5	139.5	55.0	75.0	158.5	120.3
MH152 2	Without	180.5	149.5	70.0	110.0	168.5	-
	With	205.5	174.5	70.0	110.0	193.5	155.3
MM202 2	Without	163.0	132.0	55.0	92.5	151.0	-
	With	188.0	157.0	55.0	92.5	176.0	137.8

Brake Specification

Rated voltage	V	DC24V ±10 %
Rated current	A	1.0
Static friction torque	Nm	>9.55
Engage time	ms	<120
Release time	ms	<30
Release voltage	V	> DC1V

DRIVE OBSESSED

CONTROL TECHNIQUES

Control Techniques has been designing and manufacturing the best variable speed drives in the world since 1973.

Our customers reward our commitment to building drives that outperform the market. They trust us to deliver on time every time with our trademark outstanding service.

More than 45 years later, we're still in pursuit of the best motor control, reliability and energy efficiency you can build into a drive. That's what we promise to deliver, today and always.

1.4K+
Employees

70
Countries

#1 FOR ADVANCED MOTOR AND DRIVE TECHNOLOGY

Nidec

Nidec Corporation is a global manufacturer of electric motors and drives.

Nidec was set up in 1973. The company made small precision AC motors and had four employees. Today, it's a global corporation that develops, builds and installs cutting-edge drives, motors and control systems in over 70 countries with a workforce of more than 110,000.

You'll find its innovations in thousands of industrial plants, IoT products, home appliances, cars, robotics, mobile phones, haptic devices, medical apparatus and IT equipment all over the world.

109K	$14.6B	70+	330+
Employees	Group Turnover	Countries	Companies

CONTROL TECHNIQUES

THE GLOBAL DRIVE SPECIALISTS SINCE 1973

Outstanding Performance

Applying our more than 45 years' engineering experience to everything we do means we outstrip the competition time and again.

Tried and Trusted

Millions of people around the world trust us knowing we're committed to unrivalled design and top build quality.

Total Flexibility

Our drives are built with open design architecture. They integrate with all primary communication protocols providing all the flexibility you could want.

Embedded Intelligence

Combining precision motor control with the highest embedded intelligence means ultimate productivity and efficiency for your machinery.

Global Reach, Local Support

Our dedicated Application Engineers in 70 countries are obsessed with ever-better drive design and technology. **That's what gives us the edge.**

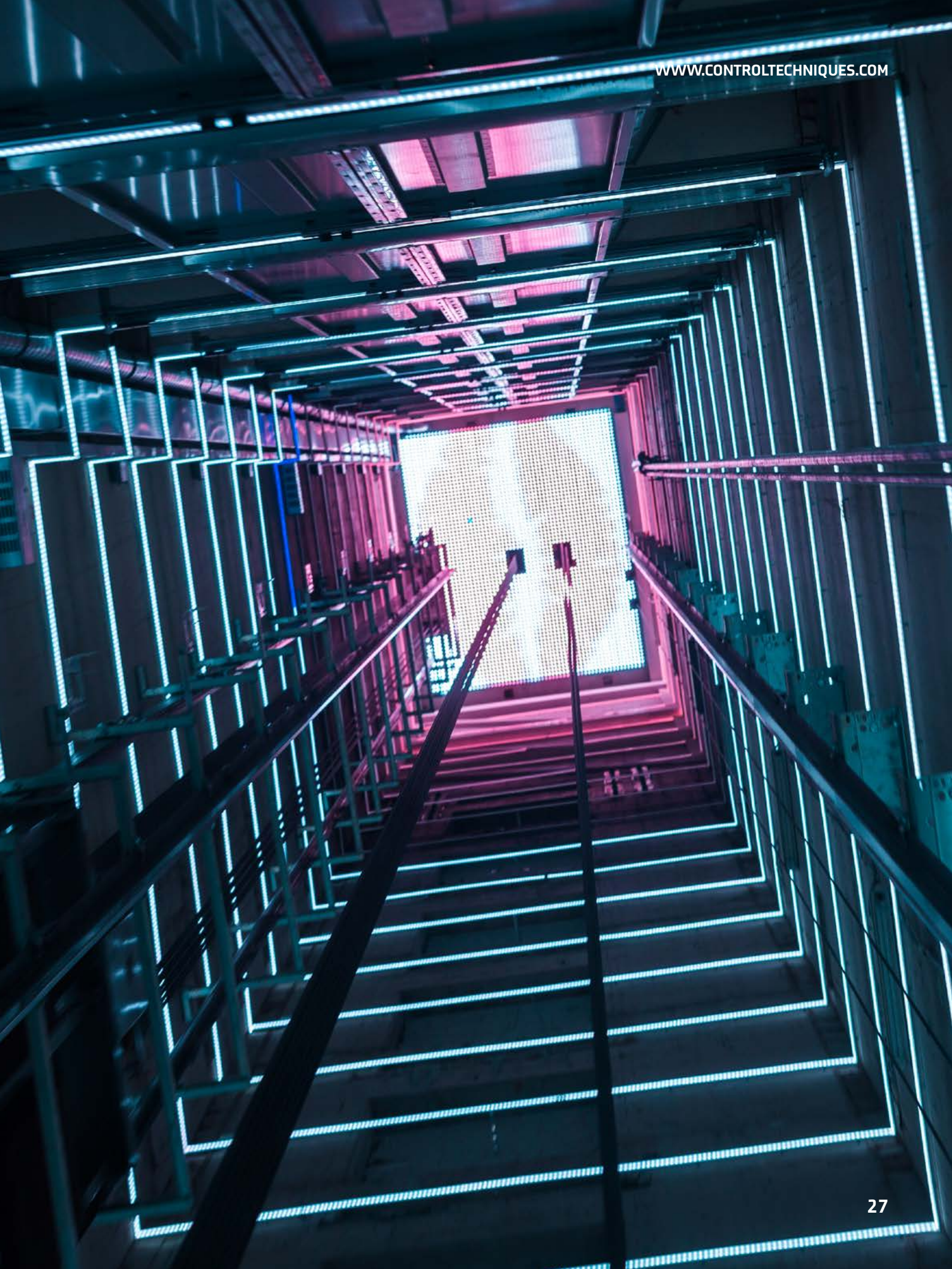

CONTROL TECHNIQUES

CONTROL TECHNIQUES IS YOUR GLOBAL DRIVES SPECIALIST.

With operations in over 70 countries, we're open for business wherever you are in the world.

For more information, or to find your local drive centre representatives, visit:

www.controltechniques.com

Connect with us

THE AUTOMATION ENGINEER

©2020 Nidec Control Techniques Limited. The information contained in this brochure is for guidance only and does not form part of any contract. The accuracy cannot be guaranteed as Nidec Control Techniques Ltd have an ongoing process of development and reserve the right to change the specification of their products without notice.

Nidec Control Techniques Limited. Registered Office: The Gro, Newtown, Powys SY16 3BE.

Registered in England and Wales. Company Reg. No. 01236886.

P.N. 0778-0509-03 04/20

Nidec
All for dreams